HIGOLD AUSTRALIA

34L Twin Pull Out Concealed Waste Bin
for 400mm cabinet widths

HG-307012-0745

1 Connect the slider to the base frame

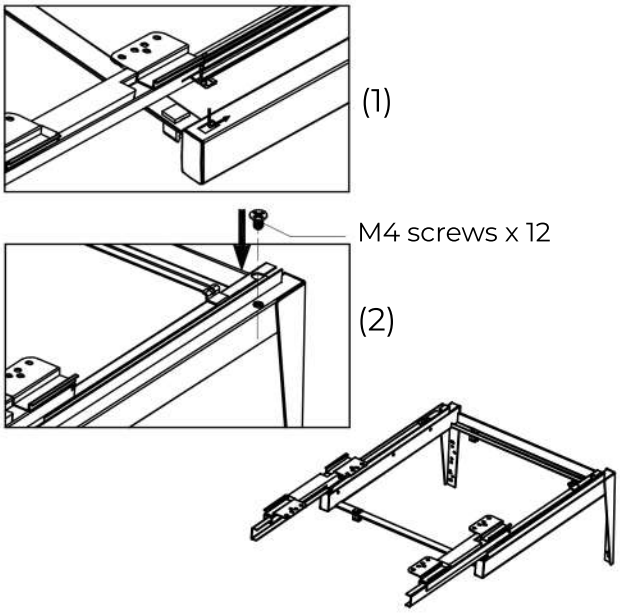

2 Fix the base frame on the bottom panel and secure with the included ST3.5 * 16 tapping screws

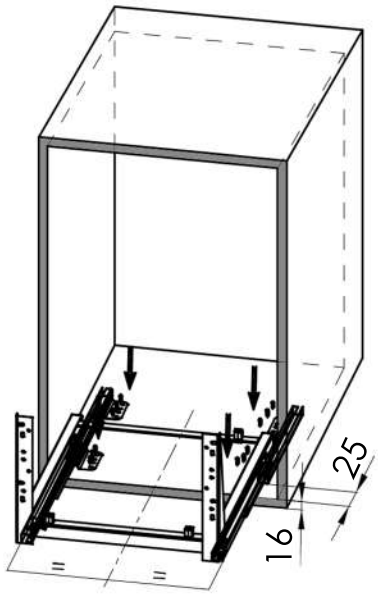

3 Attach the door panel

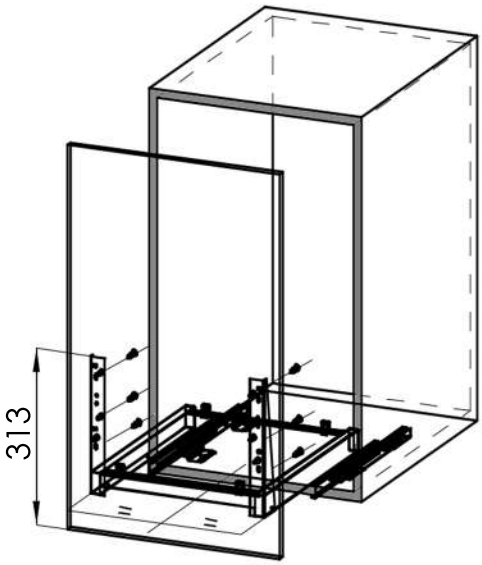

4 Place and secure the waste bin into the bearing frame

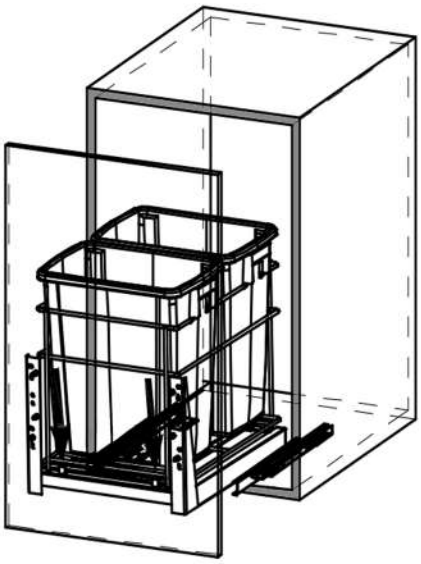

© Copyright HIGOLD Australia
A division of the Vanguard Design Group

higoldhardware.com.au
(03) 8682 8585