Domestique PLUS 56L Twin Slide Out Concealed Waste Bin - 400mm Cabinet - With Optional Door Mount Kit

ELITE STORAGE SOLUTIONS

Contents List

	ITEM NAME	IMAGE	QUANTITY
1	Saddle brackets		4 pcs
2	PFO4x16		16 pcs
3	PFO4x25		6 pcs
4	KFO4.5x45		4 pcs
5	Plastic screws + M10 nut		4 pcs
6	Side stabiliser		4 pcs
FOR DOOR MOUNT (OPTIONAL)			
7	TF04x14		8 pcs
8	M6x16mm		2 pcs
9	M5x10mm		6 pcs
10	Door Connectors and Brackets (INCLUDED IN THE BOX)	*(See step 3 for door bracket image)*	2 pcs

Model

EL-400-2-4098-D

- Twin 56L pull-out — 2 x 28L
- Suits standard 400mm wide cabinet (external)
- 45kg weight limit

Optional Door Mount Kit

The installer can choose from two types of cabinet door installation:

1. Hinged cabinet door: Simply open door then pull out the bin. Does not require the optional door mount kit
2. Mount cabinet door to bin front: Pulling out the cabinet door will pull out the bin. Requires installation of the included door mount kit (see Step 3)

Dimensions

Suits a 400mm wide cabinet (external), or larger

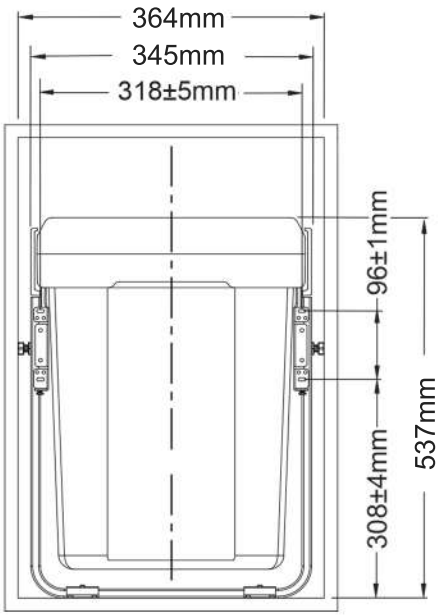

Unit Dimensions

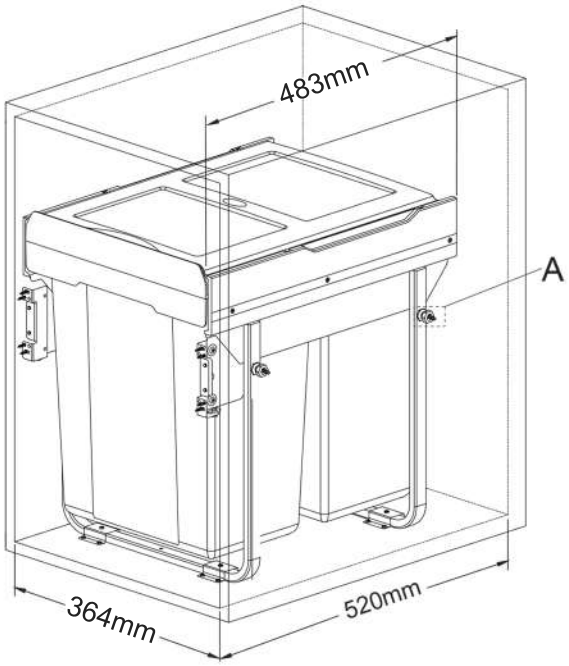

Cabinet Interior Dimensions

© Copyright ELITE
A specialist brand of the Vanguard Design Group

EliteKitchenStorage.com.au
(03) 8682 8585

Domestique PLUS 56L Twin Slide Out Concealed Waste Bin - 400mm Cabinet - With Optional Door Mount Kit

ELITE® STORAGE SOLUTIONS

STEP 1: Mount frame to cabinet base

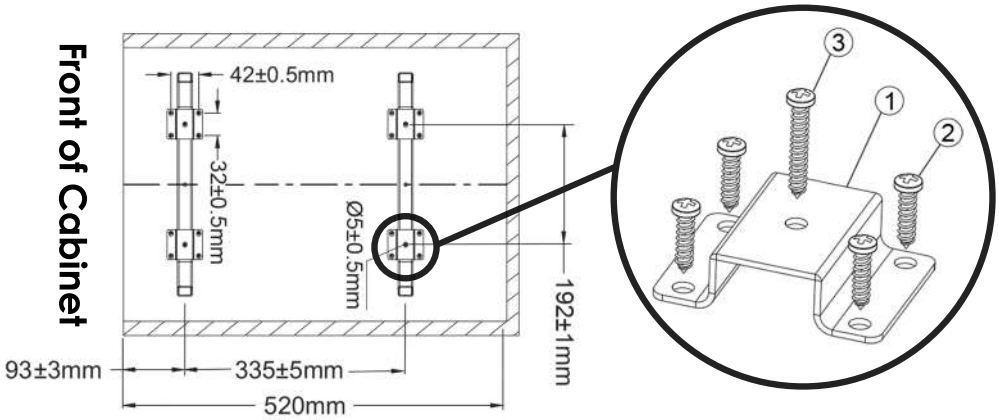

Position frame on cabinet floor - *see diagram*

Affix saddles (1) over base of frame to the floor of the cabinet using screws (2) and screws (3) - *see diagram*

STEP 2: Affixing side stabilisers

NOTE: It is recommended to install the stabilisers to enhance the stability of the installed product

Adjust the stabiliser width to suit cabinet width

Attach stabiliser to frame using screw (4) to suit cabinet

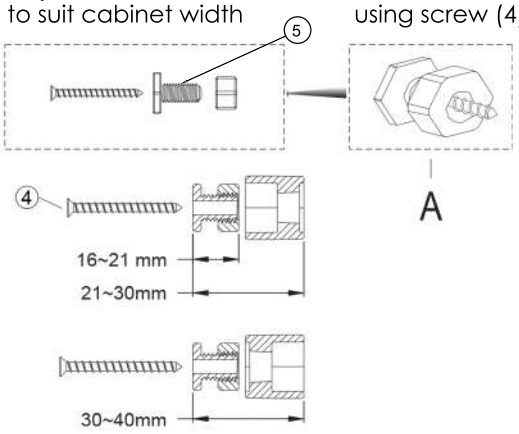

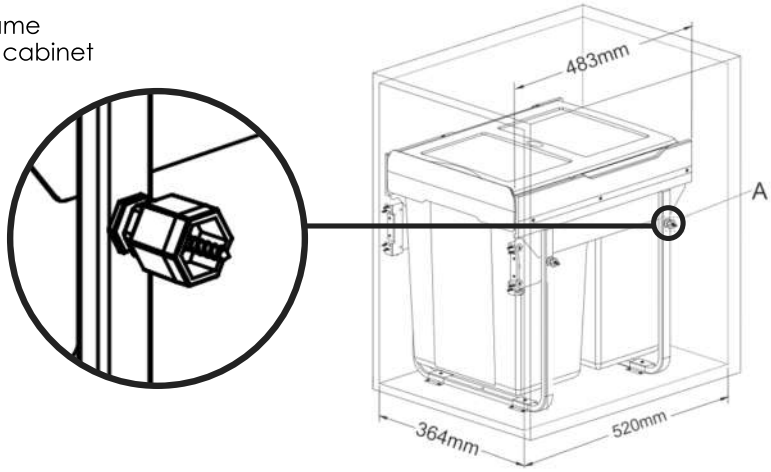

STEP 3: Affixing door (optional)

Mounting the cabinet door to the frame allows the bin to slide out when the cabinet door is pulled out.
The optional door mount kit is included in the box.

1. Remove the three hex head bolts and the plate from the inside of front of frame (left and right side).
2. Affix the optional door brackets onto the frame using the removed hex head bolts.
3. Measure the distance between the door connector mounting holes and determine where these should be drilled on the back of your cabinet door so the door is aligned.
4. The door connectors can be removed from the door brackets and affixed to the back of the cabinet door, then they can be re-connected to the door brackets.
5. Align the cabinet door using the adjustment bolts.

Door connector and bracket

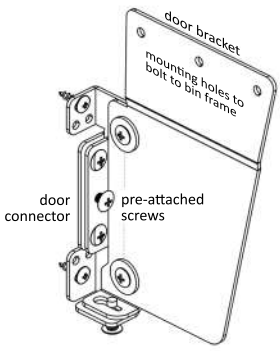

Affix door connectors to back of cabinet door

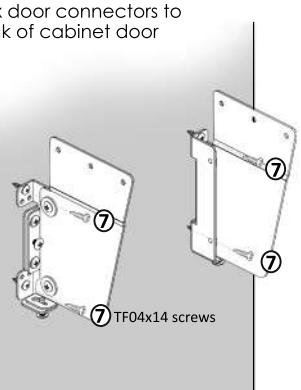

Door alignment adjustments

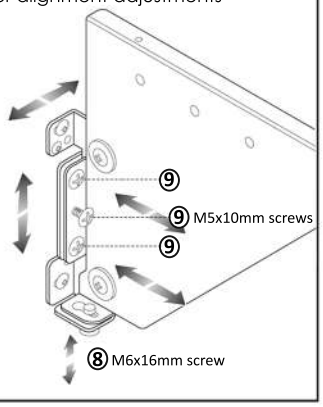

© Copyright ELITE
A specialist brand of the Vanguard Design Group

EliteKitchenStorage.com.au
(03) 8682 8585